PLEZD

Heavy Duty Plastic Belt Accumulating Conveyor (Zero Pressure Accumulating Type)

The Model PLEZD is a plastic belt conveyor designed to handle footed pallets, slip sheets, and unitized loads – items normally non-conveyable on roller conveyor. The PLEZD provides zero pressure accumulation, reducing the possibility of product damage.

- EZDrive™ System (Individual zone drive)
- EZLogic® Accumulation System (Retro-Reflective)
- Heavy Duty Plastic Belt
- Shaft Mounted Drives
- Adjustable HS-Type Floor Supports Available

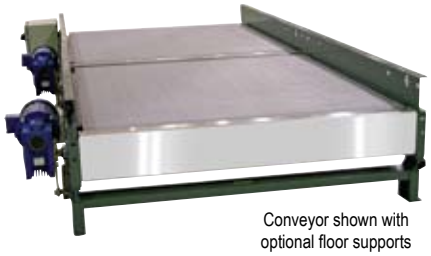

Conveyor shown with optional floor supports

U.S. Patent Numbers
5,862,907 • 7,243,781 • 7,591,366 • 6,860,381
Other Patents Pending.

Belt Width	30.1"	33.4"	36.8"	40.2"	43.5"	46.8"	50.2"	60.2"	73.6"
Between Rail Width	31"	35"	37"	41"	45"	47"	51"	61"	75"
Overall Frame Width	34"	38"	40"	44"	48"	50"	54"	64"	78"
WEIGHTS PER ZONE (Lbs.)	525	575	600	640	690	715	760	880	1025

All weights in catalog are conveyor weights only. Accessories, crating, etc., are not included.
Weights in chart are for one 60" zone.

HOW IT WORKS

The conveyor is made up of accumulation zones. Each zone contains an individual zone drive interfaced to Hytrol's EZLogic® Zone Controllers which sense product presence and control the accumulation and release of the zones by starting and stopping the zone drives.

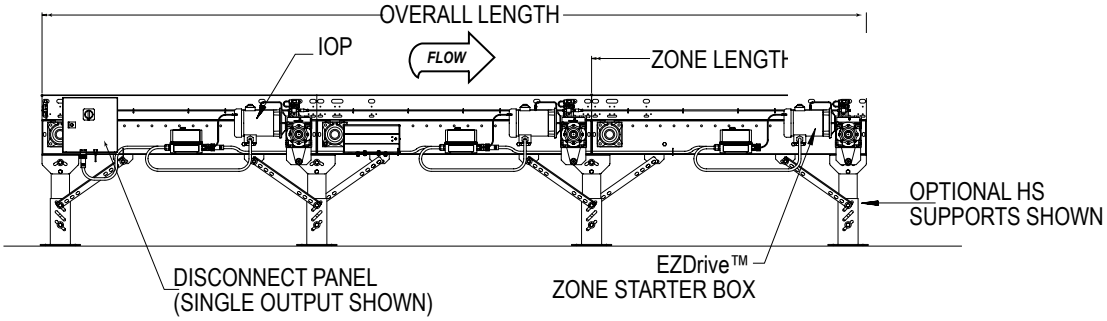

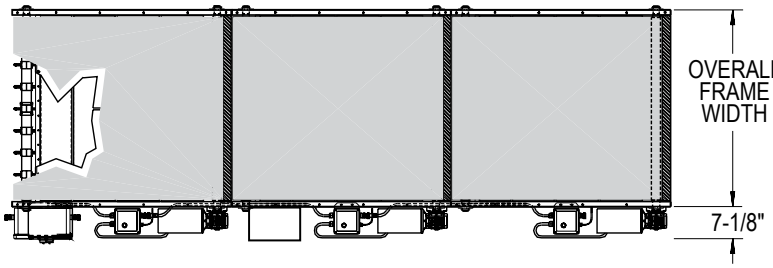

TOP VIEW

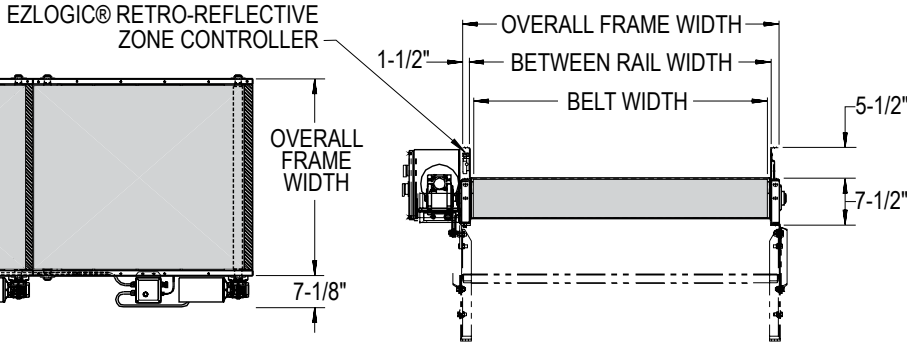

END VIEW

HYTROL CONVEYOR COMPANY, INC.

• STANDARD SPECIFICATIONS

BELT–1" pitch polypropylene plastic belt.

BED–¼" UHMW over steel bed channels mounted in 7 ½" x 7 ga. powder painted formed steel channels.

EZDrive™ System–Shaft mounted gearmotor located at discharge of each zone. (½ HP - 3 PH 60 Hz. Totally enclosed fan cooled. 230 or 460 V (specify voltage). Includes EZDrive™ Disconnect Panel. Power is distributed zone to zone through pluggable cordsets. Power is connected from the starter box to the motor via "SO" type cord. Please contact factory if local code requires other than the standard power distribution techniques described.

ACCUMULATION ZONES–30 in. to 120 in. on 6 in. increments.

EZLogic® ZONE CONTROLLER–Located in each zone (Retro-Reflective). NEMA 1, 2, IP 62. UL Approved.

IOP–Provides 27VDC, 100 watt power for EZLogic® accumulation system - contains slots for 4 input/output boards. Should be located near disconnect panel. See chart for maximum quantity of zones. Requires 120VAC or 230VAC single phase input.

CONVEYING SPEED–Constant 34 FPM.

CAPACITY–See Chart.

FLOOR SUPPORTS–Now supplied as optional equipment.

	GEAR BOX SIZE 63				GEAR BOX SIZE 90			
LOAD PER ZONE	500 LBS.		1000 LBS.		1500 LBS.		2000 LBS.	
MOTOR HP	½ HP GEARMOTOR		¾ HP GEARMOTOR		1 HP GEARMOTOR		1 ½ HP GEARMOTOR	
DISCONNECT PANEL TYPE	230 V	460 V	230 V	460 V	230 V	460 V	230 V	460 V
SINGLE OUTPUT	1-5 ZONES	1-10 ZONES	1-3 ZONES	1-6 ZONES	1-2 ZONES	1-5 ZONES	1-2 ZONES	1-4 ZONES
DUAL OUTPUT	6-10 ZONES	11-20 ZONES	4-6 ZONES	7-12 ZONES	3-5 ZONES	6-10 ZONES	3-4 ZONES	5-8 ZONES

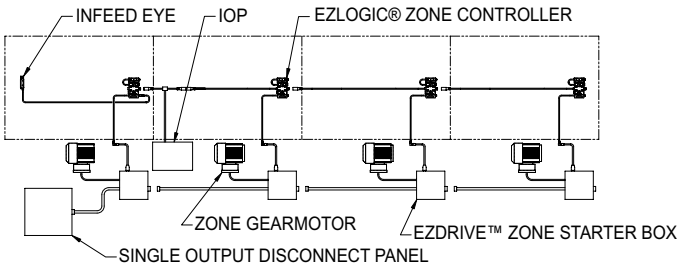

† **Note**: Infeed Wake-Up Eye used only on terminating infeed end of conveyor. Not used when connecting to upstream EZLogic® conveyor through power supply isolation cable.

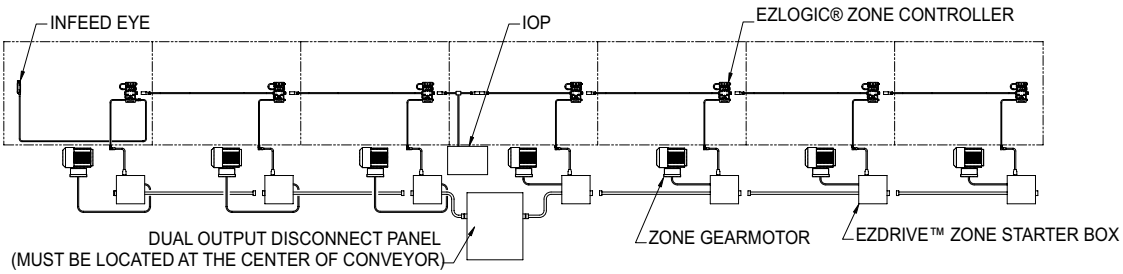

EZLOGIC® ACCUMULATION SYSTEM

Hytrol's EZLogic®, or "Electronic Zero-pressure Logic" Accumulation System, combines the sensing accuracy of photo-electronics with discrete electronic logic control without the use of a PLC or pneumatic logic components. The EZLogic® Accumulation System provides many features including:

Zero-Pressure Accumulation of Product

Zone Stop - Function is built in. Any zone may be transformed into a workstation by connecting a dry contact switching device to the auxiliary port of the EZLogic® Zone Controller. This feature is always used at the discharge end of the conveyor line, and may be used at any other location where a zone stop is required.

Dynamic Zone Allocation – Automatically adjusts the conveyor's zone length to accommodate the length of the product being conveyed. Improves conveyor efficiency and system flexibility.

Sleep Feature – Stops tread rollers from turning when no product is present, reducing noise, reducing energy consumption and extending roller bearing life.

Unloading Zone Feature - Zone On Delay – Timer delays the zone immediately upstream from a removed load, preventing it from driving for a set time. This feature is ideal where loads are routinely removed from the conveyor with a lift truck.

Loading Zone Feature – Zone detects load being placed onto the conveyor with a fork truck and stops the zone from driving and automatically prevents any loads in zones upstream from entering loading area.

• OPTIONAL EQUIPMENT

FLOOR SUPPORTS–HS Type floor supports are available with a wide range of adjustment. Specify top of belt elevation. One support required at every bed joint and ends of conveyor (for standard lengths and capacity). Holes in feet for lagging to floor. Knee braces recommended above HS-6 support.

CONVEYING SPEED–Other constant and variable speeds available, contact factory.

GEARMOTORS– ¾ HP, 1 HP, and 1 ½ HP available.

EZDrive™ System:

- Variable Frequency Drive-for adjusting conveying speed or adjusting acceleration and deceleration time.

EZLogic® – See EZLogic® Components Page.